Lafferty Equipment Manufacturing, LLC
Installation & Operation Instructions

Model # 224201X-SS · Jug Rack, SS Wire, 1 Gallon - Fits Round, Square & F-Style

SPECIFICATIONS

Max. Width	8.0"
Max. Height	6.5"
Max. Protrusion from Wall	7.5"
Mount Holes	1/4"

**Maximum dimensions include rack frame*



Lafferty EQUIPMENT MANUFACTURING LLC

CFS TECHNOLOGIES

www.laffertyequipment.com
501-851-2820

WARNING! READ ALL INSTRUCTIONS BEFORE USING EQUIPMENT!

OVERVIEW

This unique rack design accommodates various 1 gallon jug styles, including round, square, and rectangular "F-style".

SAFETY & OPERATIONAL PRECAUTIONS

This page intentionally left blank.

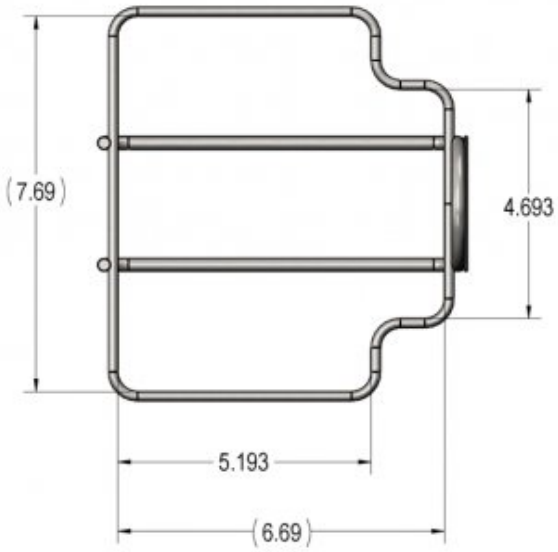
(7.69)
4.693
5.193
(6.69)



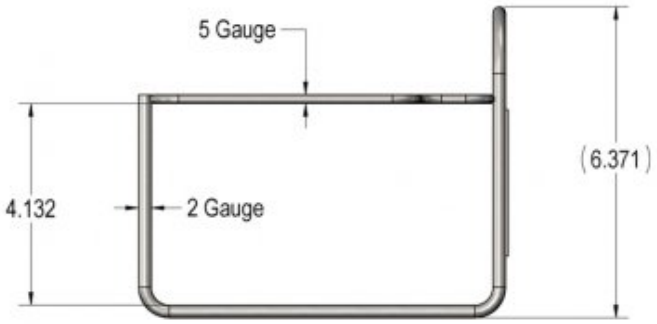
5 Gauge
4.132
2 Gauge
(6.371)

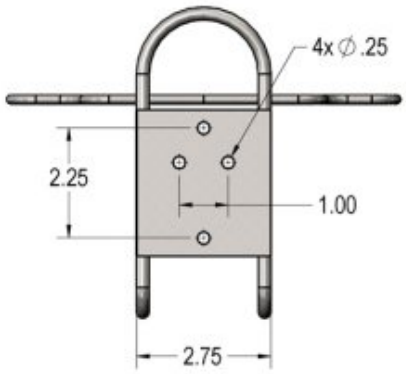
4x ∅ .25
2.25
1.00
2.75

This page intentionally left blank.